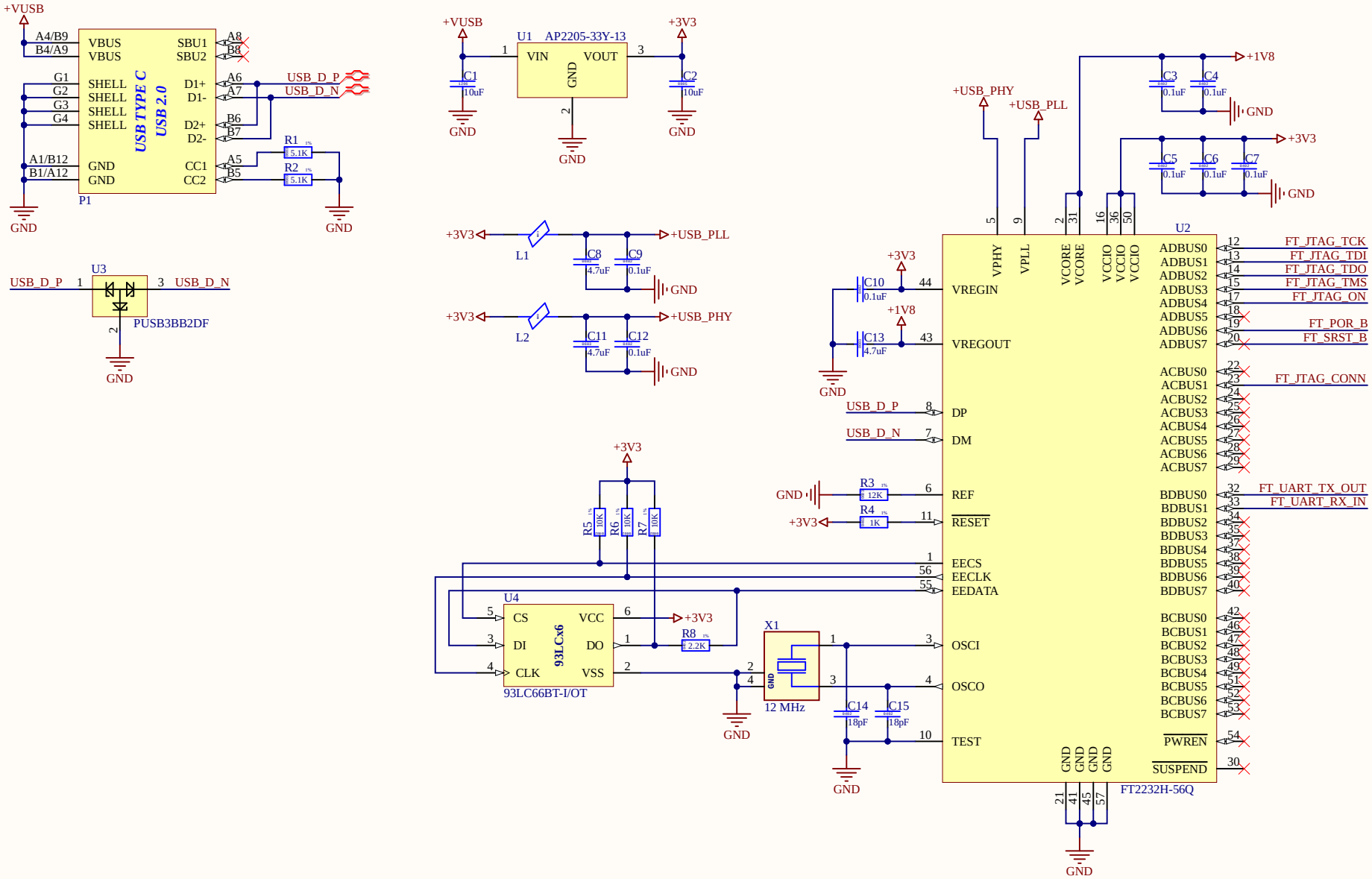

FTDI Xilinx JTAG

Page **USB Type C connector and FT2232H**

Size: Letter	Variant: [No Variations]	Revision: A
Date: 2023-05-22 Time: 12:51:18 AM	Sheet 1 of 2	
File: FTDI Xilinx JTAG.SchDoc	Drawn by: AS	

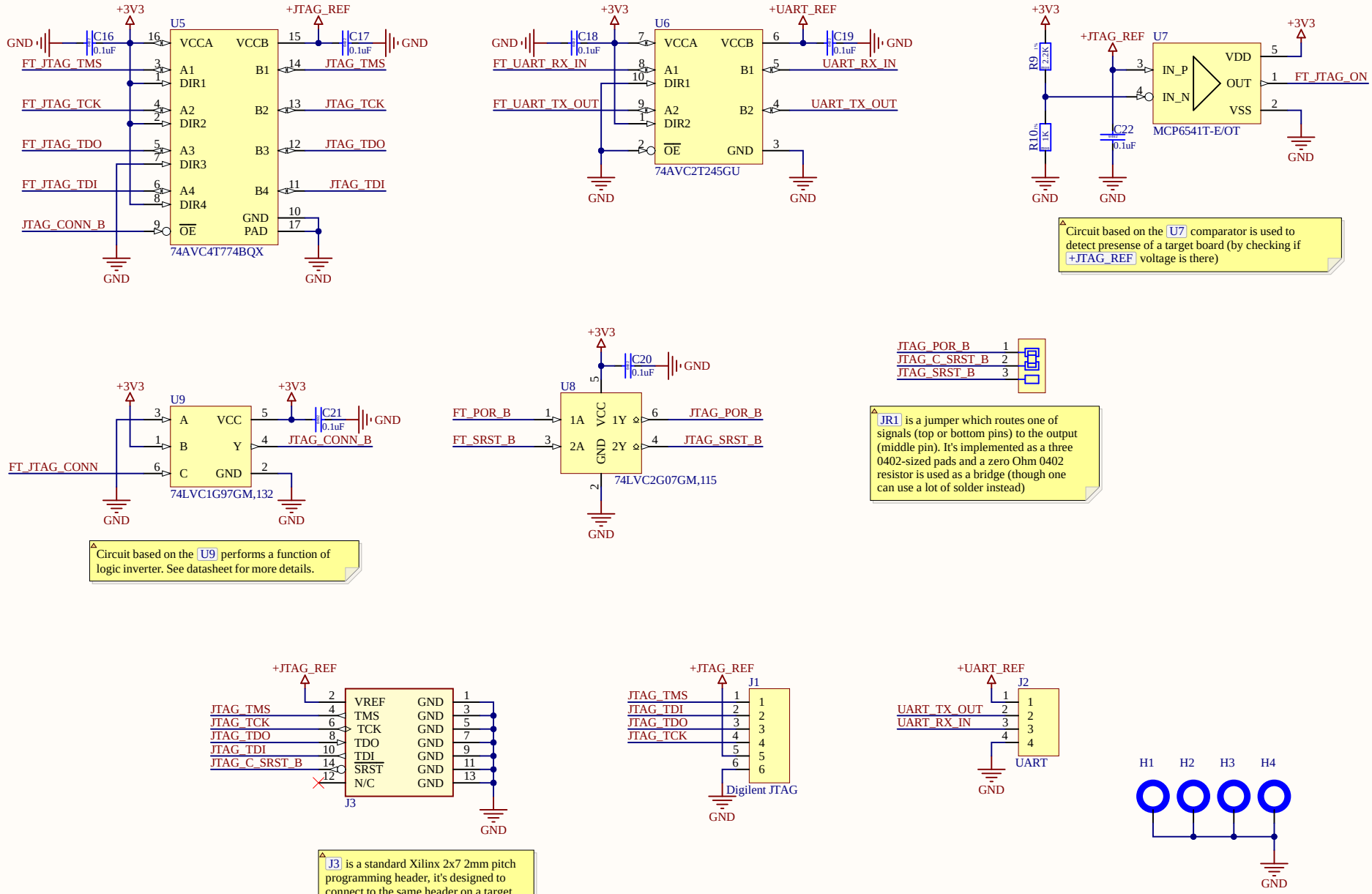

FTDI Xilinx JTAG		
Page **Level Shifters**		
Size: Letter	Variant: [No Variations]	Revision: A
Date: 2023-05-22 Time: 12:51:19 AM	Sheet 2 of 2	
File: Level Shifters.SchDoc	Drawn by: AS	